Yamaha DM2000

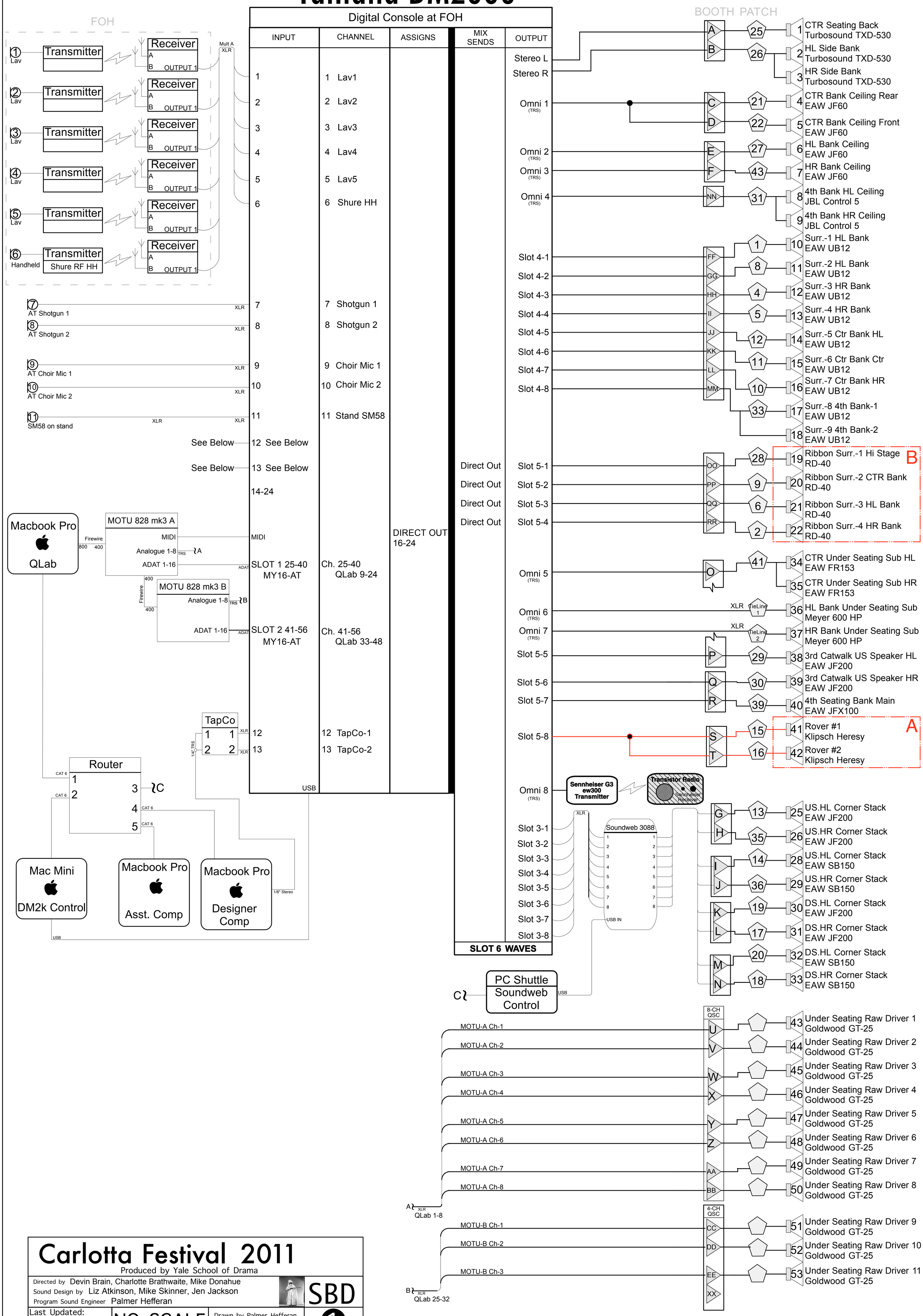

Carlotta Festival 2011

Produced by Yale School of Drama

Directed by Devin Brain, Charlotte Brathwaite, Mike Donahue
Sound Design by Liz Atkinson, Mike Skinner, Jen Jackson
Program Sound Engineer Palmer Hefferan

SBD

Last Updated:
Date: 4/14/11
Time: 02:31 PM

NO SCALE

Drawn by Palmer Hefferan, Ken Goodwin & Matt Otto

1